iver

14 - 16 STEPNEY STREET STEPNEY SA 5069

Door Lever Verona Rectangular Latch/Privacy/Euro Pair H240xW38xP56mm

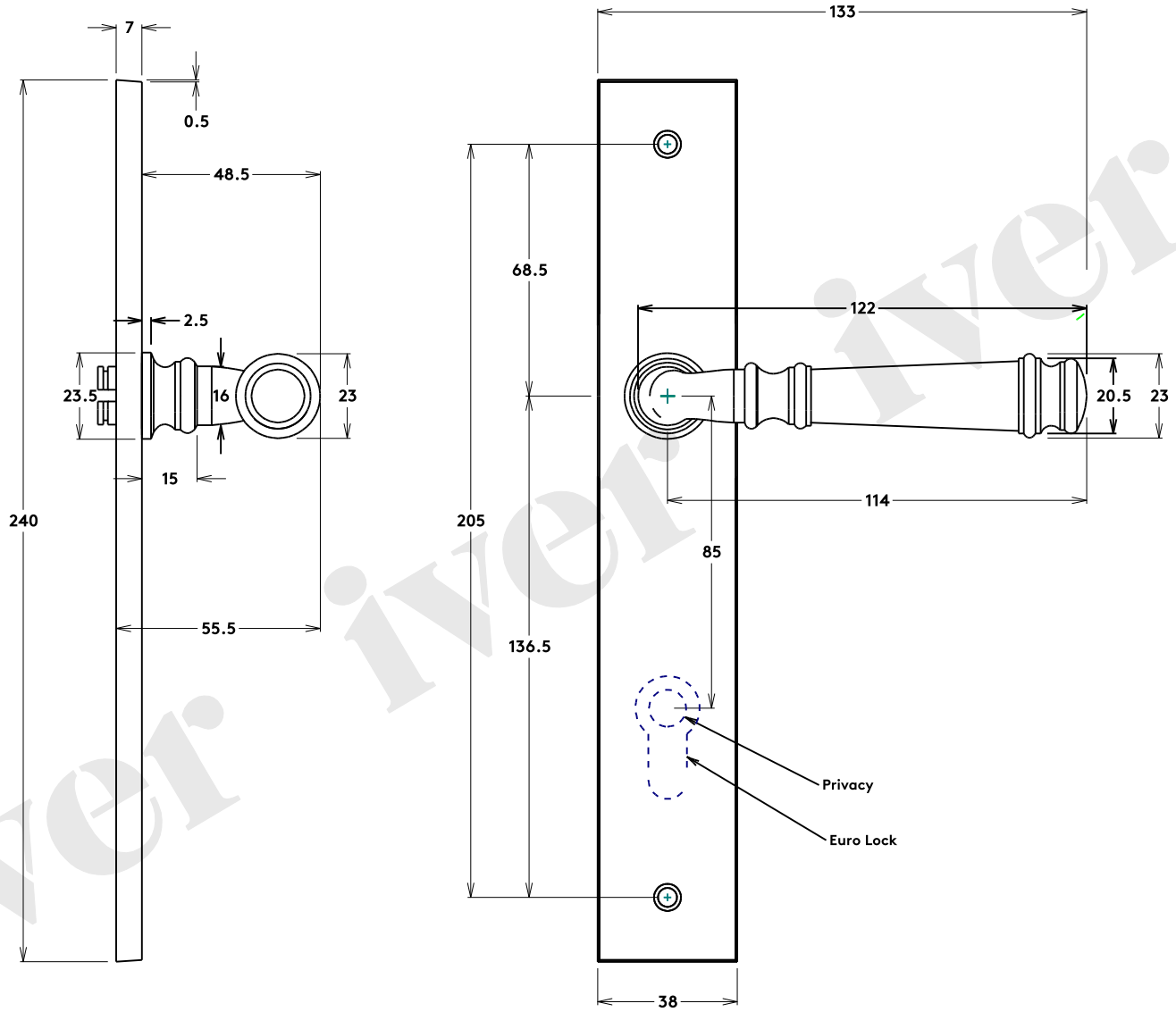

Date 12/12/2021 Revision B

Tolerance +/-1mm

iver iver iver